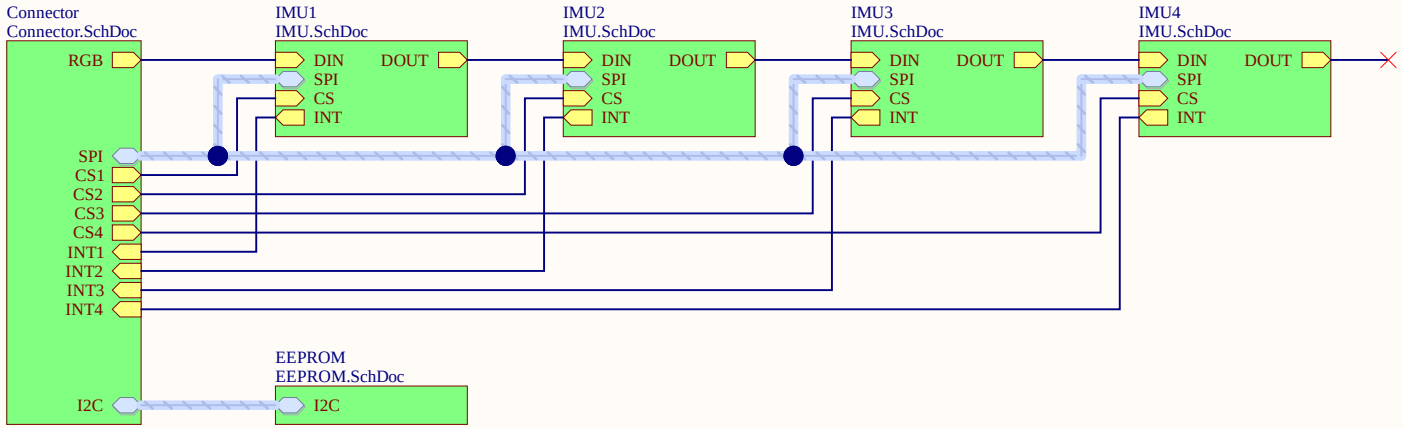

TITLE	Main.SchDoc		
SIZE A4	PROJECT Twintig IMUs		VERSION v1.0
VARIANT	[No Variations]	SHEET 1	OF 4
AUTHOR	Seb Madgwick	DATE	2/3/2025

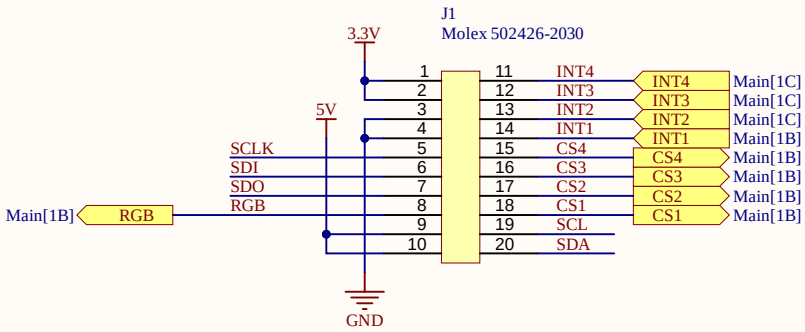

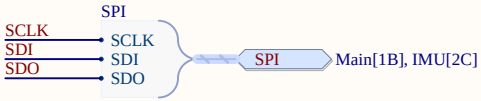

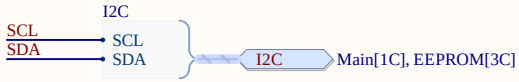

TITLE	Connector.SchDoc		
SIZE A4	PROJECT Twintig IMUs		VERSION v1.0
VARIANT	[No Variations]	SHEET 2	OF 4
AUTHOR	Seb Madgwick	DATE	2/3/2025

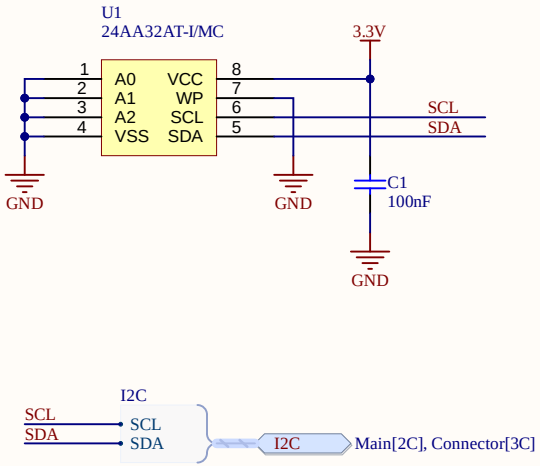

TITLE	EEPROM.SchDoc		
SIZE A4	PROJECT Twintig IMUs		VERSION v1.0
VARIANT	[No Variations]	SHEET 3	OF 4
AUTHOR	Seb Madgwick	DATE	2/3/2025

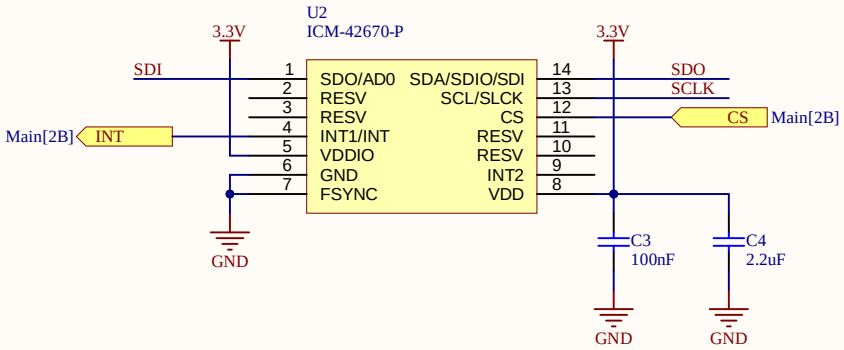

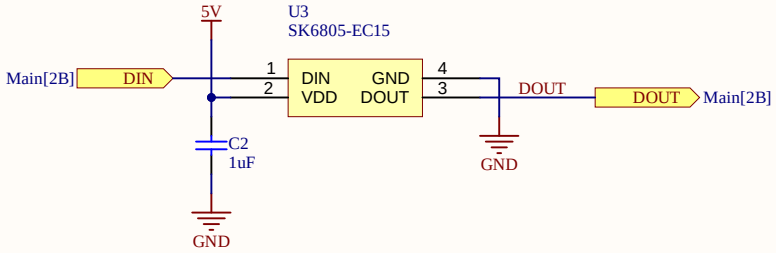

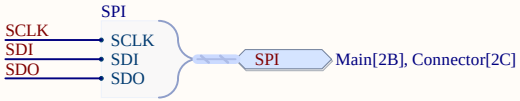

TITLE	IMU.SchDoc		
SIZE A4	PROJECT Twintig IMUs		VERSION v1.0
VARIANT	[No Variations]	SHEET 4	OF 4
AUTHOR	Seb Madgwick	DATE	2/3/2025

Twintig IMUs v1.0

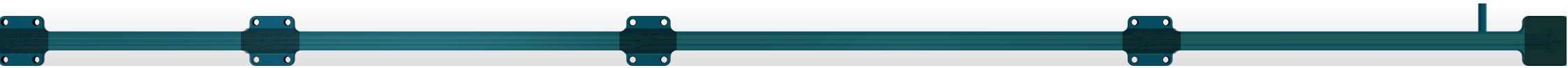

Designator	Quantity	Comment	Footprint
C1, C3_IMU1, C3_IMU2, C3_IMU3, C3_IMU4	5	100nF	Capacitor 0201
C2_IMU1, C2_IMU2, C2_IMU3, C2_IMU4	4	1uF	Capacitor 0201
C4_IMU1, C4_IMU2, C4_IMU3, C4_IMU4	4	2.2uF	Capacitor 0201
J1	1	Molex 502426-2030	Molex 502426-2030
U1	1	24AA32AT-I/MC	TDFN-8 2x3mm
U2_IMU1, U2_IMU2, U2_IMU3, U2_IMU4	4	ICM-42670-P	ICM-42670-P
U3_IMU1, U3_IMU2, U3_IMU3, U3_IMU4	4	SK6805-EC15	SK6805-EC15